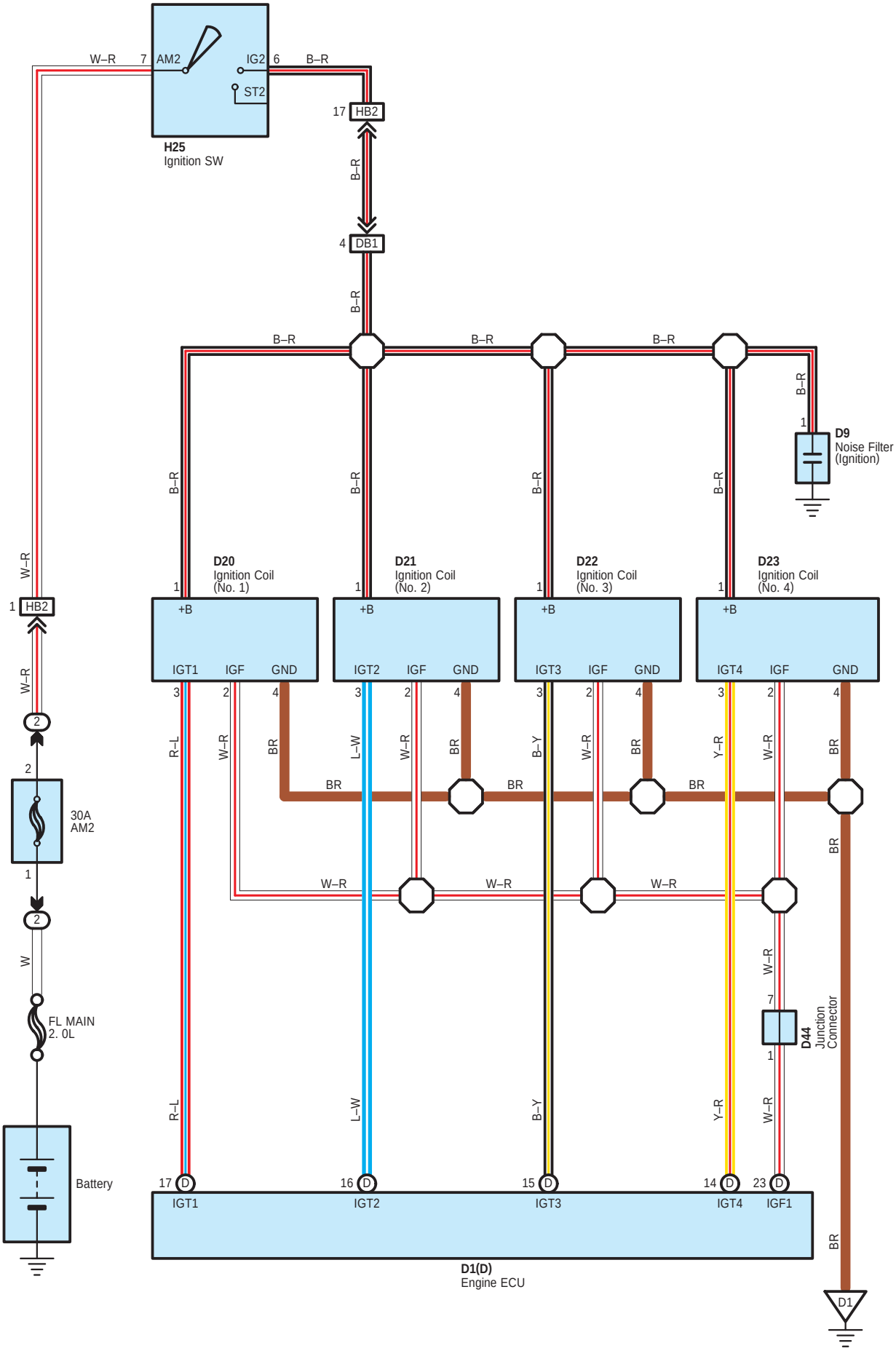
H25
Ignition SW
AM2
IG2
ST2
W–R
B–R
HB2
DB1
D9
Noise Filter
(Ignition)
D20
Ignition Coil
(No. 1)
D21
Ignition Coil
(No. 2)
D22
Ignition Coil
(No. 3)
D23
Ignition Coil
(No. 4)
+B
IGT1
IGF
GND
IGT2
IGT3
IGT4
30A
AM2
FL MAIN
2. 0L
Battery
D44
Junction
Connector
IGF1
D1(D)
Engine ECU
D1

: Parts Location

Code		See Page	Code	See Page	Code	See Page
D1	D	44 (*1)	D21	44 (*1)	D44	44 (*1)
		52 (*4)		52 (*4)		52 (*4)
D9		44 (*1)	D22	44 (*1)	H25	49 (LHD)
		52 (*4)		52 (*4)		57 (RHD)
D20		44 (*1)	D23	44 (*1)		
		52 (*4)		52 (*4)		

: Relay Blocks

Code	See Page	Relay Blocks (Relay Block Location)
2	28	Engine Room R/B No.2 (Inside of Battery Room)

: Connector Joining Wire Harness and Wire Harness

Code	See Page	Joining Wire Harness and Wire Harness (Connector Location)
DB1	60 (*1)	Engine Wire and Engine Room Main Wire (Front Side of Engine Room R/B No.1)
	68 (*4)	
HB2	64 (LHD)	Instrument Panel Wire and Engine Room Main Wire (Under the Instrument Panel J/B)
	72 (RHD)	

: Ground Points

Code	See Page	Ground Points Location
D1	60 (*1)	Engine Block
	68 (*4)	

* 1 : LHD 2TR–FE * 2 : LHD 2KD–FTV * 3 : LHD 5L–E * 4 : RHD 2TR–FE * 5 : RHD 2KD–FTV * 6 : RHD 5L–E * 7 : 2TR–FE
* 8 : 2KD–FTV, 5L–E