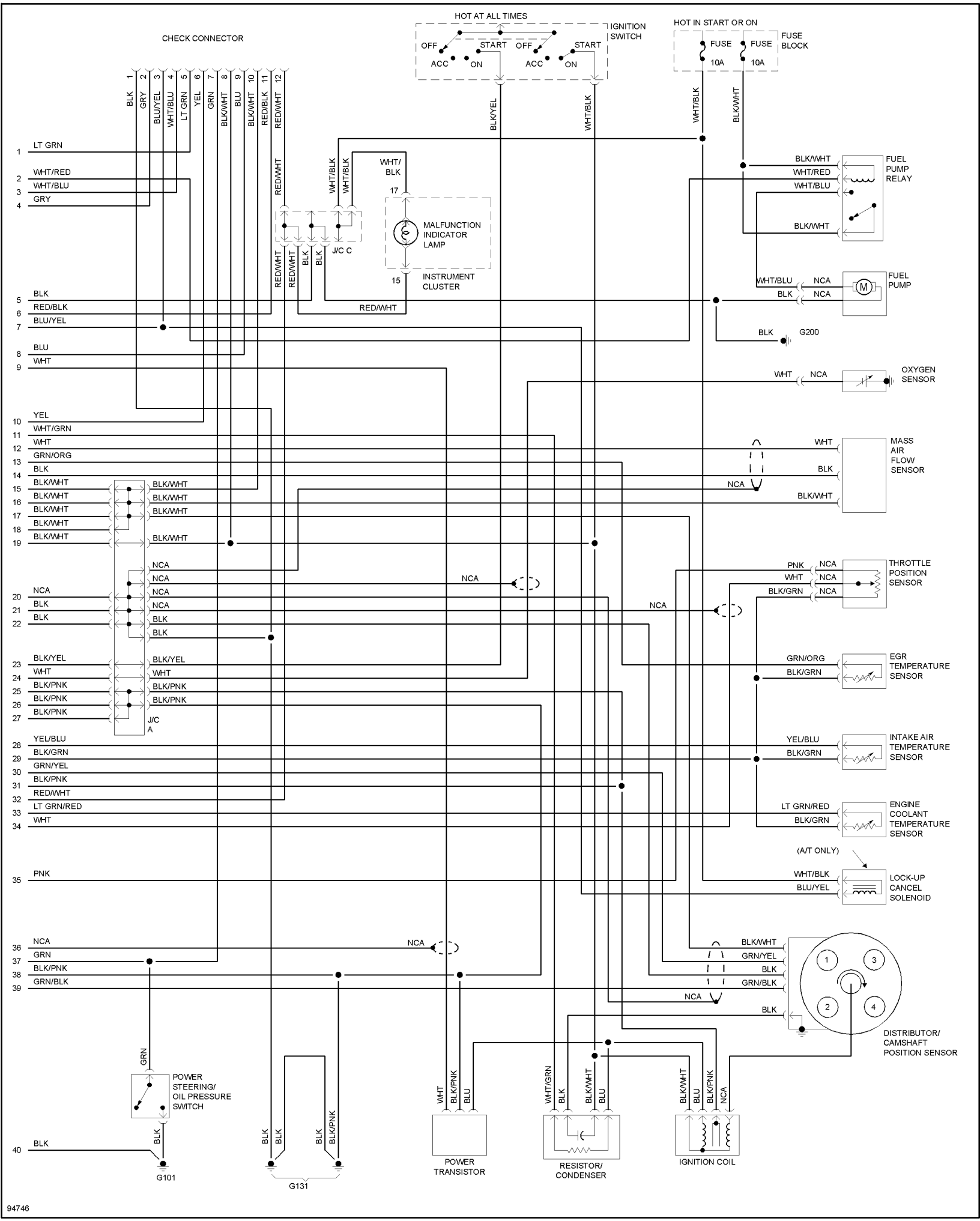
CHECK CONNECTOR
HOT AT ALL TIMES
IGNITION SWITCH
OFF
ACC
ON
START
HOT IN START OR ON
FUSE BLOCK
FUSE 10A
FUSE 10A
BLK 1
GRY 2
BLU/YEL 3
WHT/BLU 4
LT GRN 5
YEL 6
GRN 7
BLK/WHT 8
BLU 9
BLK/WHT 10
RED/BLK 11
RED/WHT 12
LT GRN
WHT/RED
WHT/BLU
GRY
WHT/BLK
WHT/BLK
WHT/BLK
17
MALFUNCTION INDICATOR LAMP
15
INSTRUMENT CLUSTER
J/C C
RED/WHT
RED/WHT
BLK
BLK
RED/WHT
BLK
RED/BLK
BLU/YEL
BLU
WHT
YEL
WHT/GRN
WHT
GRN/ORG
BLK
BLK/WHT
BLK/WHT
BLK/WHT
BLK/WHT
BLK/WHT
BLK/WHT
BLK/WHT
BLK/WHT
BLK/WHT
BLK/WHT
BLK/WHT
BLK/WHT
NCA
NCA
NCA
NCA
NCA
NCA
BLK
BLK
BLK
BLK
BLK/YEL
WHT
BLK/PNK
BLK/PNK
BLK/PNK
BLK/PNK
BLK/PNK
J/C A
YEL/BLU
BLK/GRN
GRN/YEL
BLK/PNK
RED/WHT
LT GRN/RED
WHT
PNK
NCA
GRN
BLK/PNK
GRN/BLK
BLK
BLK/WHT
WHT/RED
WHT/BLU
BLK/WHT
FUEL PUMP RELAY
WHT/BLU
BLK
NCA
NCA
FUEL PUMP
BLK
G200
WHT
NCA
OXYGEN SENSOR
WHT
BLK
NCA
BLK/WHT
MASS AIR FLOW SENSOR
PNK
WHT
BLK/GRN
NCA
NCA
NCA
THROTTLE POSITION SENSOR
GRN/ORG
BLK/GRN
EGR TEMPERATURE SENSOR
YEL/BLU
BLK/GRN
INTAKE AIR TEMPERATURE SENSOR
LT GRN/RED
BLK/GRN
ENGINE COOLANT TEMPERATURE SENSOR
(A/T ONLY)
WHT/BLK
BLU/YEL
LOCK-UP CANCEL SOLENOID
BLK/WHT
GRN/YEL
BLK
GRN/BLK
BLK
1
2
3
4
DISTRIBUTOR/ CAMSHAFT POSITION SENSOR
GRN
POWER STEERING/ OIL PRESSURE SWITCH
BLK
BLK
BLK
BLK
BLK
BLK/PNK
G101
G131
WHT
BLK/PNK
BLU
POWER TRANSISTOR
WHT/GRN
BLK
BLK/WHT
BLU
RESISTOR/ CONDENSER
BLK/WHT
BLU
BLK/PNK
NCA
IGNITION COIL
94746